10321490

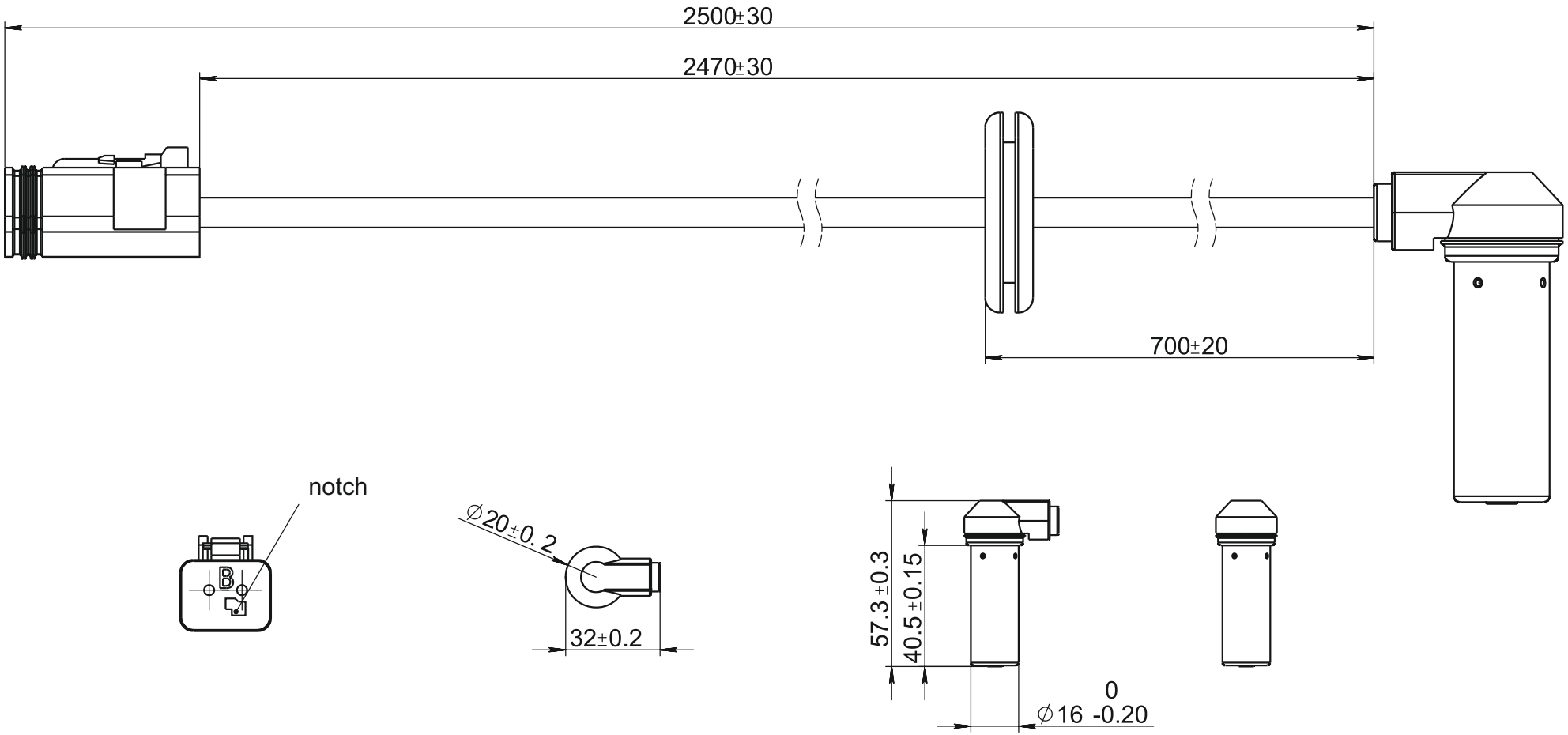

TE PARTS					10321490		
Rev.	Sheet	Doc. No.	Sign.	Date	ABS sensor	Letter / Weight	Scale 1:1
Dvlpd by							
Chkd by							
Tech. Ctrl						Sheet	Sheets 1
Reg. Ctrl					PA66 reinforced nylon (black) + GF30		
Aprvd by							